DOI: https://doi.org/10.67203/zjeet.2021.2d5lnxrb

Zaria Journal of Electrical Engineering Technology, Department of Electrical Engineering, Ahmadu Bello University, Zaria – Nigeria. Vol. 10 No. 2, September 2021. ISSN: 0261 – 1570.

DEVELOPMENT OF AN IMPROVEDARTIFICIAL BEE COLONY BASEDCOORDINATION SCHEME FOR DIRECTIONAL OVERCURRENT RELAY IN DISTRIBUTION NETWORKS

A. J Akinbobola[1] J. Boyi[2], Y. Jubril[3], C.O. Okonkwo[4] , K.O. Iyapo[5]
[&,4]Department of Electrical Engineering, Ahmadu Bello University, Zaria, Nigeria
[5]Department of Electronics Engineering, Daegu University, South Korea
Corresponding author email: jamesbobola02@gmail.com

Keywords: –
Artificial Bee ColonyDirectional Overcurrent Relay (DOCR)
Improved Artificial Bee Colony
IEEE 8-bus
load current

Article History: –
Received: July, 2021**Reviewed:**August, 2021**Accepted:**August, 2021
Published: September, 2021

ABSTRACT

A modified Directional Over-Current Relay (DOCR) operational time characteristic equation has been developed by introducing two new parameters (load current ratio and fault/load voltage ratio) into the conventional operational time characteristic equation to ensure flexibility while still retaining the necessary property of the original equation. An Improved Artificial Bee Colony (IABC) optimization algorithm has been developed by integrating a newly developed Algorithm-1 with the conventional ABC algorithm, to form a highly efficient and reliable DOCR setting optimization algorithm with a definite rate of convergence. DOCR settings optimization simulations have was carried out using IEEE 8-bus networks. The result obtained was compared with other optimization techniques reported in the literature under a similar condition. The proposed IABC based approach presented good results and a high rate of convergence in searching for the optimum solution in DOCRs setting optimization problem.

1. INTRODUCTION

Protection coordination is a process of determining the primary protective devices responsible for clearing the fault as quickly as possible for each fault location, considering that if any of the devices fail, each should be backed up by another protective device [1].The introduction of distributed generation (DG) to the distribution network and the recent drive toward smart grids is expected to transform the distribution networks into a meshed structure resembling an interconnected sub-transmission system**[2]**. Moreover, the presence of DG will affect the magnitudes and directions of the short-circuit currents resulting in a possible failure of the coordination between overcurrent relays. Hence, protection schemes based on directional overcurrent relays (DOCRs) were developed for such systems [3].

One of the most popular solutions proposed in the literature to solve the protection coordination problem of interconnected systems is the use of optimization methods. The main objective is to achieve the minimum possible tripping time by

obtaining the optimal settings of each DOCR. More recently, Metaheuristic techniques, such as particle swarm optimization (PSO) [4] genetic algorithm (GA) [5], and evolutionary methods have been proposed to solve the complex and nonconvex DOCRs protection coordination problem [6]. Usually, DOCRs operate based on the conventional inverse time-current characteristic. According to [7] further reduction of overall tripping time is possible by investigating the tripping time characteristic equation.

A new characteristic tripping equation was proposed for OCR based on the logarithm function [8]. The proposed logarithm characteristic replaces the conventional inverse time-current characteristics equation of OCRS. The results indicate that the use of the new characteristic equation leads to a noticeable reduction of the tripping time to the conventional characteristics for a radial system using OCR and, more specifically, with inverter-based DG [9], whereas, in other research work, both inverter-based and synchronous-based DG units are sometimes considered. Synchronous generator-based DG units are usually considered since their fault current contribution is much higher than inverter-based DG units and thus, they have a much more profound effect on protection coordination [10]. On the other hand, although inverter-based DG units fault current contribution is more dominant than synchronous-based DG units especially with increased renewable energy integration [11]. This research work is to develop an improved coordination scheme for directional overcurrent relays in distribution networks. The conventional relay operating time characteristic equation was modified to enhance coordination while still satisfying the rules governing relay operation. The relay algorithm achieved coordination of relay devices with minimum overall tripping time over the conventional time current relay characteristics in the protection coordination problem of meshed distribution networks.

This paper is organized as follows: Section1 presents the formulation of DOCRs coordination problem, section2 presents the proposed techniques for solving the coordination problem. In section 3, the proposed algorithm is tested on three widely used test systems; the obtained results were compared with other optimization techniques reported in the literature. Section 4 presents the conclusions of this work.

2. DOCR COORDINATION PROBLEM FORMULATION

The motive behind the development of the DOCR problem formulation is to determine the optimum Time-Dial Setting (TDS) and Peak-up current Setting (PS) of the Primary relays, which are usually located closest to the point of fault occurrence. In the event of a Primary relay coordination failure, one or more of the other relays can act as a backup to prevent the fault current from propagating itself to the other part of the network. Primary relay's fault coordination is often further classified into the close-in and the far-bus fault coordination. This is often used in literature to model a suitable relay coordination objective function.

2.1 DOCR Operation Characteristics

A DOCR is designed to operate only when the input current in the pre-set direction becomes greater than the product of its PS and the Current Transformation Ratio (CTR). The current transformer in a DOCR enables the use of the same type of DOCR with varying current transformer sizes to protect a different part of a network. The most common DOCRs are of the inverse definite minimum time (IDMT) type. The International Electro-Technical Commission (IEC) proposed equation (1) for calculating the operational time of DOCR with IDMT characteristics [7].

$$T_{i,j} = \frac{0.14 \times TDS_i}{\left(\left(\frac{I_{SC,j}}{CTR_i \times PS_i} \right)^{0.02} - 1 \right)} \quad \text{.....} \quad \textbf{(1)}$$

Furthermore, a new DOCR operational characteristic equation is proposed in this work to improve the network protection coordination while still considering the effect of the fault voltage, load current, and load voltage.

2.2 The proposed relay characteristic

The proposed DOCR coordination algorithm will be governed by a relatively new mathematical equation which additionally considers the maximum load current (I_{Lmax}); the minimum load voltage (V_{Lmin}); and the fault voltage (V_f), unlike the equation governing the conventional DOCR characteristic equation which only considers the pickup current I_0 and the short-circuit current I_{SC}. The proposed DOCR characteristic equation is represented by equation (2).

$$T_{i,j} = \left(\frac{0.14 \times TDS}{\left(\frac{I_{SC}}{I_0} \right)^{0.02} - 1} \right) \exp \left(\frac{\log_{10}(M_I)}{\left(\left(\frac{I_{SC}}{I_0} \right)^{0.02} - \log_{10}(M_V) \right)^{M_I}} \right) \quad (2)$$

where $T_{i,j}$ represents the operational time of the ***i***th DOCR based on the ***j***th fault. The ratio $\frac{I_{SC}}{I_0}$ is also referred to as the default/actual current multiplier (M)

$$M_I = \frac{I_{L\max}}{I_0} \quad (3)$$

and

$$M_V = \frac{V_f}{V_{L\min}} \quad (4)$$

are the current and voltage multipliers respectively. The pickup current (I_0) can further be expressed in terms of the ***i***th pickup setting (PS_i) and current transformation ratio (CTR_i) using the equation.

$$I_0 = PS_i \times CTR_i \quad (5)$$

Figures 1 and 2 represent a 3D plot describing the effect of M_I and M_V on the DOCR characteristics respectively. In Figure 1, as M_I increases, the tripping time increase until M_I exceeds unity, in which the tripping time approximately varies less with change in M_I. For larger values of M_I, the tripping time stops varying with changes in M_I. In the case of Figure 2, the exact opposite can be noticed about M_V. Although at about M_V =3, the tripping time becomes almost insensitive to M_V. In general, the tripping time of the proposed DOCR is directly proportional to M_I and inversely proportional to M_V. Equation (2) was design using a try and error approach with MATLAB Simulation Software to achieve an exponentially varying relay characteristic equation with changes in fault voltage. This implies that, in addition to the current sensors in conventional DOCRs, a voltage sensor is required for effective coordination.

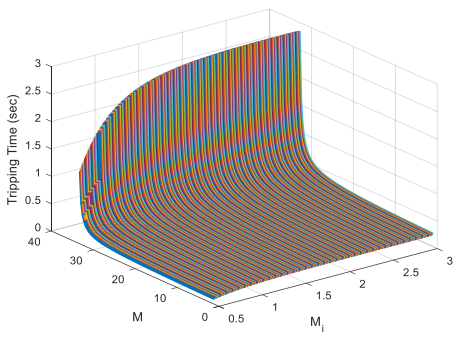

Fig 1; Effect of M_I on the proposed Tripping time

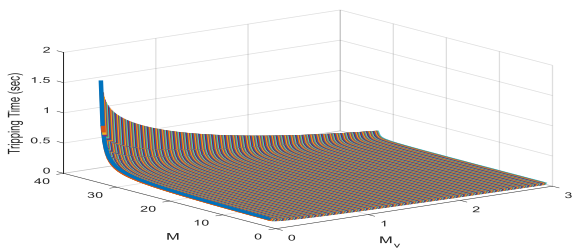

Fig 2: Effect of M_v on the proposed tripping time

2.3 DOCR Objective function

The Objective Function (OF) commonly used for DOCR problem solution optimization is formulated to minimize the overall sum of the relay's operational time (when they are functioning as primary relays).DOCRs are expected to operate as fast as possible to prevent the effect of a phenomenon called "built-up current", while still ensuring constraints satisfaction.

$$OF^{1} = \sum_{i=1}^{N_{DOCR}} T_{i,j}^{pri.} \quad (6)$$

where N_{DOCR} represents the total number of DOCR in the network, $T_{i,j}^{pri.}$ represents the operational time of ***i***th primary relay when it coordinates the ***j***th fault.

2.4 DOCR Optimization Constraints

The proposed DOCR optimization is designed to satisfy 4 major constraints. Conventionally, these constraints are usually integrated into a selected optimizer algorithm (that would be used to predict the *TDS* and *PS* that could generate the optimal relay settings) to prevent it from generating infeasible solutions. However, this may greatly reduce the rate at which solutions are found, thereby decreasing the rate of convergence, and possibly resulting in a premature convergence. To avert the drawback, the constraints are formulated and integrated into the conventional objective function to form a Modified Objective Function (MOF).

$$MOF = OF + N_{DOCR}\left(\sum_{C=1}^{4} F_C\right) \quad (7)$$

where n is the index of the objective function type, F_C is the constraints cost function of the ***C***th constraint evaluated over the entire network. Furthermore, the second part of the right-hand side of equation (10) is designed to disappear if and only if, the entire DOCR optimization constraints are satisfied. The proposed constraints cost functions are developed as follows.

2.4.1 Operational Time Constraint

The DOCR operational time of each (m) primary relay is subjected to a constraint that bounds it between a certain minimum and maximum. In this work, the minimum and maximum DOCR operational times are set to 0.05s and 1.00s respectively. To ease integrating this constraint into the objective function, the DOCR

operational time constraints cost function (F_1) is developed as represented by equation (8).

$$F_1 = \sum_{m=1}^{N_{DOCR}} \begin{cases} T_{m,j}^{pri} - 1 & T_{m,j}^{pri} > 1 \\ 0 & 0.05 \le T_{m,j}^{pri} \le 1 \\ 0.05 - T_{m,j}^{pri} & T_{m,j}^{pri} < 0.05 \end{cases} \quad (8)$$

2.4.2 Time Dial Setting (TDS) Constraint

The TDS of each (m) primary relay is also subjected to a constraint that bounds it between a certain minimum (TDS^{Min}) and maximum (TDS^{Max}). To ease integrating this constraint into the objective function, the DOCR TDS constraints cost function (F_2) is developed as represented by equation (9).

$$F_2 = \sum_{m=1}^{N_{DOCR}} \begin{cases} TDS_m - TDS^{Max} & TDS_m > TDS^{Max} \\ 0 & TDS^{Min} \le TDS_m \le TDS^{Max} \\ TDS^{Min} - TDS_m & TDS_m < TDS^{Min} \end{cases} \quad (9)$$

2.4.3 Peak-up Setting (PS) Constraint

The PS of each (m) primary relay is also subjected to a constraint that bounds it between a certain minimum (PS^{Min}) and maximum (PS^{Max}). To ease integrating this constraint into the objective function, the DOCR PS constraints cost function (F_3) is developed as represented by equation (10).

$$F_3 = \sum_{m=1}^{N_{DOCR}} \begin{cases} PS_m - PS^{Max} & PS_m > TDS^{Max} \\ 0 & PS^{Min} \le PS_m \le PS^{Max} \\ PS^{Min} - PS_m & PS_m < PS^{Min} \end{cases} \quad (10)$$

2.4.4 Coordination Time Interval Constraint

The Coordination Time Interval (CTI) is another important parameter in DOCR optimization that ensures network protection and maximizes the proximity of fault detection and isolation. As previously stated, it represents the minimum time delay between a primary relay operation and its corresponding backup relay counterparts. The CTI constraint is computed over a set of predefined primary-backup (P/B) relay pair [m, n] of fault detection and isolation operations. The CTI constraint is one of the most critical and default constraints to satisfy. The minimum allowable coordination time interval (CTI^{Min}) can be used to formulate a suitable cost to amount for this constraint. To ease integrating this constraint into the objective function, the CTI constraints cost function (F_4) is developed as represented by equation (11).

$$F_2 = \sum_{m=1}^{N_{[m,n]}} \begin{cases} CTI^{Min} - T_{n,j}^{bac} + T_{m,j}^{pri} & T_{n,j}^{bac} - T_{m,j}^{pri} < CTI^{Min} \\ 0 & otherwise \end{cases} \quad (11)$$

The objective function $T_{n,j}^{bac}$ and $T_{m,j}^{pri}$ are evaluated using the $T_{i,j}$ formula presented in either equation (1) or (2) depending on the simulation scenario.

3. IMPROVED ARTIFICIAL BEES COLONY (IABC) ALGORITHM

The proposed improved Artificial Bees Colony (IABC) optimization algorithm is a modified form of the conventional ABC algorithm with enhanced solution search capability. However, the enhancement is achieved by integrating ABC with a new solution search procedure (Algorithm-1) that further explores the solution search space, to improve the rate of

convergence of the standard ABC algorithm. Algorithm-1 attempts to achieve optimization by randomly searching the entire boundaries around the current solution set. Consider an ABC optimizer-based solution candidate set generated at ***t***he stage as represented by equation (17).

$$X_{ABC}^{t} = \left\{ TDS_1^t \quad TDS_2^t \quad ... \quad TDS_{N_{DOC}}^t \quad PS_1^t \quad PS_2^t \quad ... \quad PS_{N_{DOC}}^t \right\} \quad (12)$$

The proposed IABC is achieved by improving every X_{ABC}^{t} by shifting its elements to a new and better solution search space given rise to a new solution candidate set X_{IABC}^{t} using Algorithm-1. In Algorithm-1, an ABC-based candidate solution total number of DOCRs N_{DOCR}; the maximum number of optimization trials N_{Try}; and the maximum number of optimization iteration for a particular DOCR $Iter$ are all taken as input whereas, the output is the improved solution X_{IABC}^{t}. The algorithm begins by evaluating the fitness of the original solution using step 2. A range of random real numbers is generated between steps 6 and 10. These numbers are gradually used to modify the solution using steps 19 and 20. The algorithm obtains and temporarily stores DOCR settings using steps 12 and 13. These settings are respectively modified using steps 19 and 20. The algorithm then evaluates the fitness of a new solution formed by modifying the settings of the current relay using step 21. Finally, the original solution is replaced by the new solution if the latter has a lower fitness value using steps 23 and 24. Otherwise, the new solution is discarded. Steps 16, 15, 14, 11, and 5 are respectively completed one after the order, and then step 25 is finally carried out. In Algorithm-1, $\Re_{real}^{[a,b]}$ is used to represent a random real number (N) generated within the closed interval $a \le N \le b$; whereas, $\Re_{Int}^{[c,d]}$ represents a random Integer (N) generated within the closed interval $c \le N \le d$;

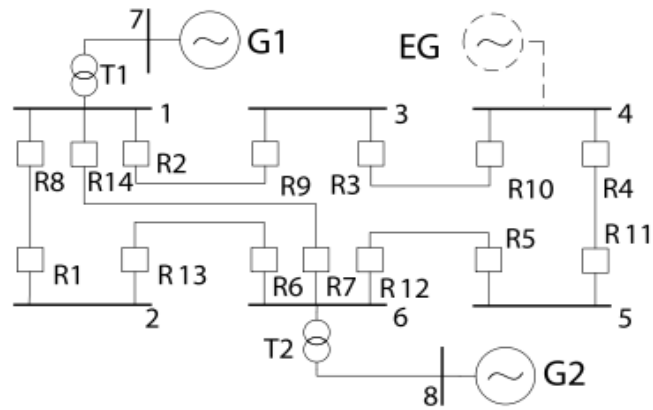

Figure 3: Single line diagram of the IEEE 8 bus system

4.0 Cases-Study/Test Systems

In this work, IEEE 8 - bus test system were employed to investigate and demonstrated the performance of the proposed IABC based DOCR settings optimization approach.

4.1 Case 1

This scenario involves a DOCR settings optimization of the IEEE 8-Bus network. This can also be considered as a medium DOCR optimization problem (with 14 DOCRs and 20 P/B pair constraints). The total operational time of the primary DOCRs (OF) was minimized to 8.2079s. The results of this scenario showed that the DOCRs have a district TDS setting. The algorithm was not restricted by the boundary conditions of TDS. However, most of the PSs are the same (bounded by the upper limit of the PS constraints). This results in a slowly varying

operational time that ranges between 0.407s to 0.796s. The proposed IABC algorithm remains the most effective approach.

4.2 Case 2

This case is intended to simulate DOCR settings optimization using the proposed DOCR operational time equation represented by equation (2). This scenario demonstrates the effect of the developed IABC algorithm on the variation of the newly introduced parameters (load current ratio ($\boldsymbol{M_I}$) and voltage ratios ($\boldsymbol{M_V}$)). The IEEE 8-Bus network was also used as the test system. All problem settings remain as those of case 1. In this scenario, several DOCR settings optimization trials were performed with varying values of $\boldsymbol{M_I}$ and $\boldsymbol{M_V}$ to investigate the convergence behaviour of the IABC algorithm. The results for the optimal DOCR settings for some combinations of $\boldsymbol{M_I}$ and $\boldsymbol{M_V}$ are presented in Table 6.

Based on equation (2), and $\boldsymbol{M_I}$ or $\boldsymbol{M_V}$ value of 0 could cause the exponential part to either diverge (if $\boldsymbol{M_I}$=0, $\boldsymbol{M_V}$=0) or vanish (if either $\boldsymbol{M_I}$ or $\boldsymbol{M_V}$ is greater than 0) due to the presence of $\log_{10}(\boldsymbol{M_I})$ and $\log_{10}(\boldsymbol{M_V})$ components. This equation does not also support negative values of either $\boldsymbol{M_I}$ or $\boldsymbol{M_V}$. It may be observed in Table 6 that, if $\boldsymbol{M_V}$ is maintained at 0.5, and $\boldsymbol{M_I}$ is varied from 0.5 to 20, the DOCR settings optimization will converge at a higher objective function value of 9.1481 (at $\boldsymbol{M_I}$=0.5), fall back to 8.2024 (at $\boldsymbol{M_I}$=1), rise back to 8.9633 (at $\boldsymbol{M_I}$=5), and finally decrease to 8.4814 (at $\boldsymbol{M_I}$=20).

However, this is not the case if some discretely selected values of $\boldsymbol{M_I}$ are considered, by neglecting slight variation in the values of the objective function (due to algorithm imperfection). The value of the optimum objective function can be seen to exponentially decay as $\boldsymbol{M_I}$ increases, as shown in Figure 4. The fluctuation in the resulting objective function values in columns 2 to 7 of Table 6 is based on the fact that, as the value of $\boldsymbol{M_I}$changes between 0.5 and 5, $\log_{10}(\boldsymbol{M_I})$ changes from a negative value (-0.3010 at $\boldsymbol{M_I}$=0.5) to a 0 (at $\boldsymbol{M_I}$=1) and rise to a positive value (0.6990 at $\boldsymbol{M_I}$=5). This causes the IABC based DOCR settings optimization convergence to behave similarly, making the optimum objective function fluctuate. Based on Figure 4, it can be concluded that, for discrete values of $\boldsymbol{M_I}$, the objective function of a DOCR optimization problem will exponentially decrease with an increase in $\boldsymbol{M_I}$.

In general, the proposed DOCR operational time equation was designed such that, the variation of the DOCR optimization problem objective function follows a similar fashion with changes in $\boldsymbol{M_I}$ at constant $\boldsymbol{M_V}$, regardless of the choice of the test network/system. However, the variations of the objective function with changes in M_V at constant M_I strongly depend on the DOCR setting optimization problem data. In columns 6, 8, 9, and 10 of Table 6, it can be observed that, if $\boldsymbol{M_I}$ is kept constant at a value of 5, and $\boldsymbol{M_V}$ is varied from 0.5 to the value of the optimum objective function gradually increases and suddenly diverges (at $\boldsymbol{M_V}$=2), resulting into infeasible solution (unsatisfied constraints, MOF>OF).

This is further described using Figure 5. However, when the value of MI was lowered to 0.5, the converged objective function value slow rises with an increase in $\boldsymbol{M_V}$ as can be observed in Figure 5**.** The DOCR optimization problem can always fail to converge at some values of $\boldsymbol{M_V}$. Further details of the

objective function behavior with changes in M_V are not presented in this work. Finally, the load current ratio (M_I) can always serve as a better choice of a sensitive parameter to either minimize or maximize the total operational time of DOCRs in any given network. Therefore, the proposed DOCR operation time equation has introduced flexibility into DOCR settings optimization problem formulation.

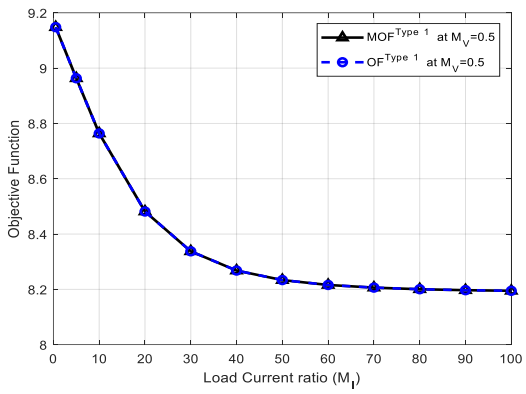

Figure 4: Variation in OF & MOF with changes in $M_I$for Mv=0.5.

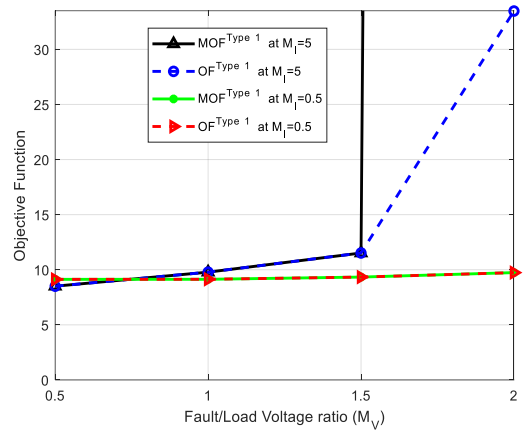

Figure 5: Variation in OF & MOF with changes in Mv for MI = 0.5 and M_I =5.

Table 1

DOCR constraints data for IEEE test systems.

IEEE-Bus	TDS^{min}	TDS^{max}	PS^{min} (A)	PS^{max} (A)	CTI^{Min} (Sec)	Change in PS /Step size (A)
8	0.1	1.1	0.5	2.5	0.3	0.5

Table 2

IEEE 8 – bus primary/back up short circuit currents (Isc) & current transformer ratio (CTR)

Relay		Normal Isc (A)		CTR	Relay		Normal Isc (A)		CTR
Primary	Back-Up	Primary	Back-Up	Primary	Primary	Back-Up	Primary	Back-Up	Primary
1	6	3232	3232	240	8	7	6093	1890	240
2	1	5924	996	240	8	9	6093	1165	240
2	7	5924	1890	240	9	10	2482	2484	160
3	2	3556	3556	160	10	11	3883	2344	240

4	3	3783	2244	240	11	12	3707	3707	240
5	4	2401	2401	240	12	13	5899	987	240
6	5	6109	1197	240	12	14	5899	1874	240
6	14	6109	1874	240	13	8	2991	2991	240
7	5	5223	1197	160	14	1	5199	996	160
7	13	5223	987	160	14	9	5199	1165	160

Table 3: Comparison of the IEEE 8- bus network

	MPSO [Zeineldin et.al., 2006]	BBO-LP [Albasri et.al., 2015]	SA-LP [Alexandre et.al., 2020]	IABC
OF(s)	17.33	8.7556	8.4271	**8.2024**

Table 4: The optimization parameter settings & scenario (case 1 to 2)

Case No.	Number of IEEE Network Buses	N_{bees}	N_{gen}	n	N_{DOCR}	N_{Try}	*Iter*	Number (P/B) Relay Pair	Operational Time Equation
1	8	28	100	1	14	14	10	20	(1)
2	8	16	100	1	8	8	10	20	(2)

Table 5: DOCR settings optimization results for IEEE 8 – bus network

n_{docr}	DOCR Settings		$T_{i,j}$	P/B Pair		CTI	P/B Pair		CTI
	TDS	PS		Primary	Backup		Primary	Backup	
1	0.1103	2.0000	0.3972	1	6	0.3000	11	12	0.3000
2	0.2542	2.5000	0.7594	2	1	0.3000	12	13	0.3000
3	0.2208	2.5000	0.6920	2	7	0.3000	12	14	0.3000
4	0.1583	2.5000	0.5908	3	2	0.3000	13	8	0.3000
5	0.1000	2.5000	0.4978	4	3	0.3000	14	1	0.4172
6	0.1682	2.5000	0.4957	5	4	0.3000	14	9	0.3000
7	0.2365	2.5000	0.6279	6	5	0.5109	-	-	-

8	0.1641	2.5000	0.4842	6	14	0.5661	-	-	-
9	0.1425	2.5000	0.5366	7	5	0.3787	-	-	-
10	0.1702	2.5000	0.6261	7	13	0.4335	-	-	-
11	0.1808	2.5000	0.6824	8	7	0.5655	-	-	-
12	0.2577	2.5000	0.7713	8	9	0.4390	-	-	-
13	0.1101	2.0000	0.4136	9	10	0.3000	-	-	-
14	0.2379	2.5000	0.6328	10	11	0.3000	-	-	-

Table 6: IEEE 8-bus network DOCR TDS &PS Results and variation in OF and MOF with changes in M_I and M_v

M_I	0.5000	1.0000	2.0000	2.0000	5.0000	20.0000	5.0000	5.0000	5.0000	0.5000	0.5000	0.5000
M_V	0.5000	0.5000	0.5000	0.5000	0.5000	0.5000	1.0000	1.5000	2.0000	2.0000	1.5000	1.0000
TDS_1	0.2019	0.1103	0.1000	0.1000	0.1000	0.1103	0.1000	0.1000	0.1000	0.1741	0.2366	0.2207
TDS_2	0.3269	0.2542	0.2553	0.2261	0.2558	0.2542	0.2138	0.1033	0.1000	0.4535	0.4303	0.4075
TDS_3	0.3121	0.2208	0.2009	0.2009	0.2012	0.2208	0.1675	0.1000	0.1030	0.4017	0.3369	0.3209
TDS_4	0.1940	0.1583	0.1492	0.1492	0.1493	0.1583	0.1137	0.1000	0.1000	0.4050	0.2829	0.2678
TDS_5	0.1183	0.1000	0.1000	0.1000	0.1000	0.1000	0.1448	0.1000	0.1000	0.1857	0.1883	0.1766
TDS_6	0.3224	0.1682	0.2317	0.1480	0.1685	0.1682	0.1531	0.1000	0.1000	0.3325	0.3738	0.3477
TDS_7	0.3052	0.2365	0.2418	0.2068	0.2101	0.2365	0.3282	0.1000	0.1000	0.3718	0.4174	0.3872
TDS_8	0.2231	0.1641	0.1653	0.1447	0.1447	0.1641	0.1279	0.1000	0.1097	0.3833	0.2996	0.2901
TDS_9	0.2122	0.1425	0.1190	0.1190	0.1176	0.1425	0.1000	0.1008	0.1000	0.2352	0.2057	0.1973
$TDS1_0$	0.2422	0.1702	0.1425	0.1425	0.1412	0.1702	0.1000	0.1000	0.1000	0.2677	0.2814	0.2706
TDS_{11}	0.2919	0.1808	0.1515	0.1515	0.1502	0.1808	0.1016	0.1000	0.1000	0.4643	0.2620	0.2525
TDS_{12}	0.4620	0.2577	0.2165	0.2165	0.2155	0.2577	0.1915	0.1041	0.1000	0.6292	0.4140	0.4000
TDS_{13}	0.1077	0.1101	0.1000	0.1000	0.1000	0.1101	0.1000	0.1000	0.1000	0.2562	0.2235	0.2160
TDS_{14}	0.4503	0.2379	0.1995	0.1995	0.1983	0.2379	0.1834	0.1000	0.1000	0.4507	0.3476	0.3320
PS_1	1.5000	2.0000	2.0000	2.0000	2.0000	2.0000	1.5000	0.5000	0.5000	2.0000	1.5000	1.5000
PS_2	2.5000	2.5000	2.0000	2.5000	2.0000	2.5000	1.5000	1.5000	0.5000	2.0000	2.0000	2.0000
PS_3	2.0000	2.5000	2.5000	2.5000	2.5000	2.5000	2.0000	1.5000	0.5000	2.0000	2.5000	2.5000
PS_4	2.5000	2.5000	2.5000	2.5000	2.5000	2.5000	2.5000	1.0000	0.5000	1.0000	2.0000	2.0000
PS_5	2.5000	2.5000	2.5000	2.5000	2.5000	2.5000	1.0000	0.5000	0.5000	2.0000	2.0000	2.0000
PS_6	1.5000	2.5000	1.0000	2.5000	2.0000	2.5000	1.5000	1.0000	0.6000	1.5000	1.5000	1.5000
PS_7	2.5000	2.5000	2.0000	2.5000	2.5000	2.5000	0.5000	1.5000	0.5000	2.5000	2.0000	2.0000
PS_8	2.0000	2.5000	2.0000	2.5000	2.5000	2.5000	2.0000	1.0000	0.5000	1.5000	2.0000	2.0000
PS_9	2.5000	2.5000	2.5000	2.5000	2.5000	2.5000	2.0000	0.6000	0.5000	2.5000	2.5000	2.5000
PS_{10}	2.5000	2.5000	2.5000	2.5000	2.5000	2.5000	2.5000	0.8000	0.5000	2.5000	2.0000	2.0000
PS_{11}	2.0000	2.5000	2.5000	2.5000	2.5000	2.5000	2.5000	1.0000	0.5000	1.0000	2.5000	2.5000
PS_{12}	1.5000	2.5000	2.5000	2.5000	2.5000	2.5000	1.5000	1.5000	0.6000	1.0000	2.0000	2.0000
PS_{13}	2.5000	2.0000	2.0000	2.0000	2.0000	2.0000	1.5000	0.5000	0.5000	1.5000	1.5000	1.5000
PS_{14}	1.5000	2.5000	2.5000	2.5000	2.5000	2.5000	1.5000	1.5000	0.5000	2.0000	2.5000	2.5000
MOF	9.1481	8.2079	8.6838	8.5424	8.9633	8.4814	9.7806	11.5199	1773.9000	9.7392	9.3345	9.1335
OF	9.1481	8.2079	8.6838	8.5424	8.9633	8.4814	9.7806	11.5199	33.4781	9.7392	9.3345	9.1335

Table 7: Comparison of the IEEE 8- bus network

	MPSO [Zeineldin et.al., 2006]	BBO-LP [Albasri et.al., 2015]	SA-LP [Alexandre et.al., 2020]	IABC
OF(s)	17.33	8.7556	8.4271	**8.2024**

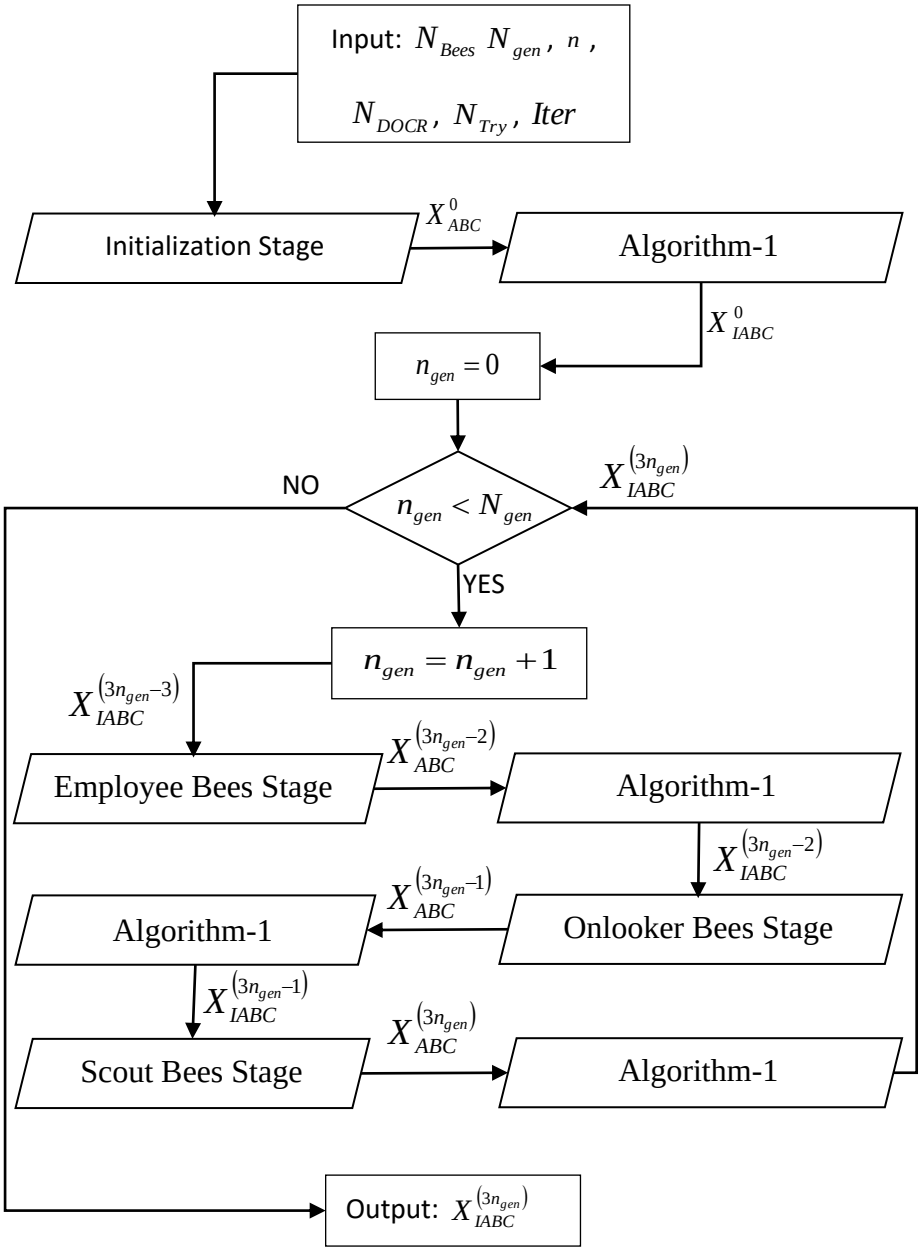

5. CONCLUSION

Directional over-current relay (DOCR) coordination is a frequently arising problem in the field of electrical engineering, which can be formulated as an optimization problem. The mathematical model of the problem is highly complex and non-linear, subject to various constraints, and requires sophisticated optimization techniques for its solution. In general, this work has presented a concise overview of the existing works on the coordination of DOCR, its fundamentals, its problem mathematical formulation strategy, and solution strategies presented in relevant works of literature.

Finally, an extensive simulation of DOCR setting optimization (case 4) based on the new DOCR operational time equation was carried out to investigate the variability of the solution convergence with changes in either the load current (M_I) or voltage ratio (M_V). The proposed IABC based DOCR setting optimization strategy has been found to demonstrate effectiveness over the existing algorithms and therefore can serve as a reliable approach for real-time DOCR coordination

.

REFERENCES

[1] Ezzeddine M., Kaczmarek R, Iftikhar M, "Coordination of directional overcurrent relays using a novel method to select their settings," *IET Gener. Transm.Distrib*., vol. 5, no. 7, pp. 743-750, 2011

[2] A. S. Abubakar, A. A. Olaniyan, A. Ibrahim, and S. H. Sulaiman, "An Improved Analytical Method For Optimal Sizing And Placement Of Power Electronic Based Distributed Generation Considering Harmonic Limits," in 2019 IEEE PES/IAS PowerAfrica, 2019, pp. 122-127.

[3] Rathinam A., Sattianadan D, Vijayakumar K, "Optimal coordination of directional overcurrent relays using particle swarm optimization technique," *International Journal of Computer Applications*, vol. 10, issue. 0975-8887, pp. 43-47, 2010

[4] Uthitsunthorn D., Pao-La-Or P., Kulworawanichpong T, "Optimal overcurrent relay coordination using artificial bees colony algorithm," *in* the *8th InternationalConference on Electrical Engineering/Electronics,Computer, Telecommunications, and InformationTechnology*, Khon Kaen, Thailand, pp. 901-904, 2011

[5] Adhikari S and N Simba, Optimal Coordination of Directional Overcurrent Relays using Bacterial Foraging Algorithm, journal of scientific & industrial research vol. 75, pp.557 – 561, 2016

[6] Moirangthem J, Krishnanand K., Dash S., Ramaswami R, "*Adaptive differential evolution algorithm for solving non-linear coordination problem of directional overcurrent relays*," *IET Transm. Gener.Distrib.*, vol. 7, no. 4, pp. 329-336, 2013

[7]Hossein Saberi1 and Turaj Amraee1, *Coordination of Directional Over-Current Relays in Active DistributionNetworks Using Generalized Benders Decomposition*. Department of Electrical Engineering, K.N. Toosi University of Technology, Tehran, Iran*l*ayout by Flash Espace, Montpellier, France. 2002.

[8] Mahari, H. Seyedi, "*An analytic approach for optimal coordination of overcurrent relays*," The Institution of Engineering and Technology, Vol. 7, Iss. 7, pp. 674–680, 2016

[9] Corrêa R, Cardoso Jr, de Araújob O.C.B, Mariotto L, "*Online coordination of directional overcurrent relays using binary integer programming*," *Electr. Power Syst. Res.*, vol. 127, pp. 118-125, 2015

[10] Alipour M, Teimourzadeh S, Seyedi H., "*Improved group search optimization algorithm for coordination of directional overcurrent relays*," *Swarm and EvolutionaryComputation*, vol. 23, pp. 40-49, 2015

[11] José de Jesús, Jaramillo Serna and Jesús M. López-Lezama. Alternative Methodology to Calculate the Directional Characteristic Settings of Directional Overcurrent Relays in

Transmission and Distribution Network. Departamento de Ingeniería Eléctrica, Facultad de Ingeniería, Universidad de Antioquia, Calle 70 No 52-21,Medellín 050010, Colombia; jose.jaramillos@udea.edu.cos

[12] R. Thangaraj, M. Pant, K. Deep, Optimal coordination of over-current relays using modified differential evolution algorithms, Eng. Appl. Artif. Intell. 23,2 pp.820–829, 2016

[13] Rathinam A., Sattianadan D, Vijayakumar K, "Optimal coordination of directional overcurrent relays using particle swarm optimization technique," *International Journal of Computer Applications*, vol. 10, issue. 0975-8887, pp. 43-47, 2010

[14] T. Amraee, Coordination of directional overcurrent relays using seeker algorithm, IEEE Trans. Power Deliv. 27 (3) (2012)

[15] Amir Ahmarinejad*, Seyed Mohsen Hasanpour, Mojtaba Babaei, Mohammad Tabrizian "*Optimal Overcurrent Relays Coordination in Microgrid Using Cuckoo Algorithm*" 3rd International Conference on Power and Energy Systems Engineering, CPESE 2016, 8- 12 September 2016, Kitakyushu, Japan